STATE	PROJECT	SHEET NUMBER

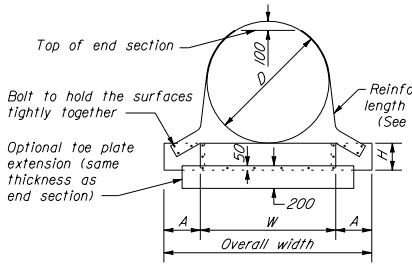

FRONT VIEW
ROUND PIPE CULVERT

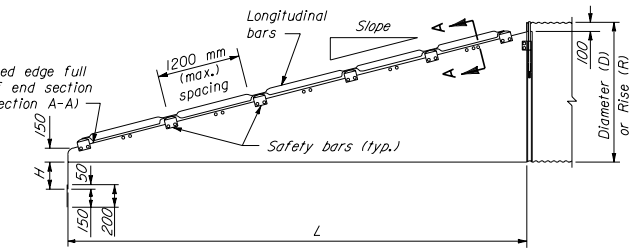

ELEVATION
CROSS DRAINAGE END SECTION

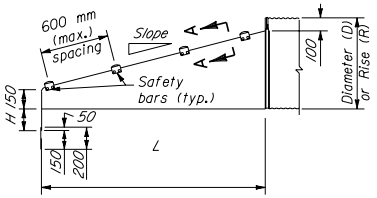

ELEVATION
PARALLEL DRAINAGE END SECTION

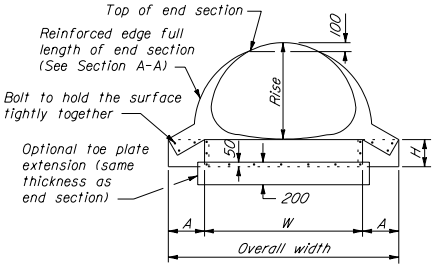

FRONT VIEW
PIPE ARCH CULVERT

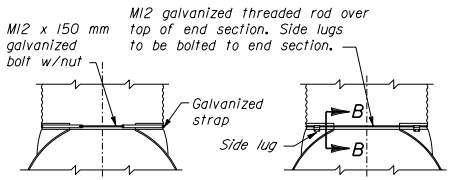

FOR METAL ROUND PIPES 375 mm THRU 600 mm

TYPE #1

FOR METAL ROUND PIPES 750 mm AND LARGER. FOR PIPE ARCHES 525 x 375 MM AND LARGER

TYPE #2

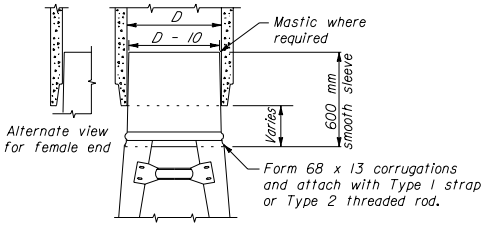

FOR ALL SIZES OF CONCRETE ROUND OR PIPE ARCHES

TYPE #3

CONNECTOR DETAILS

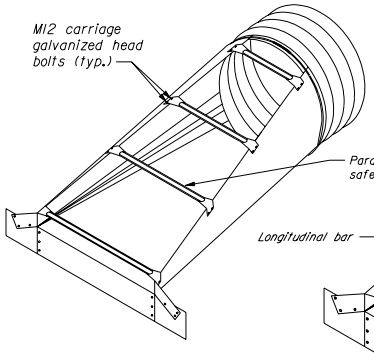

PARALLEL DRAINAGE END SECTION

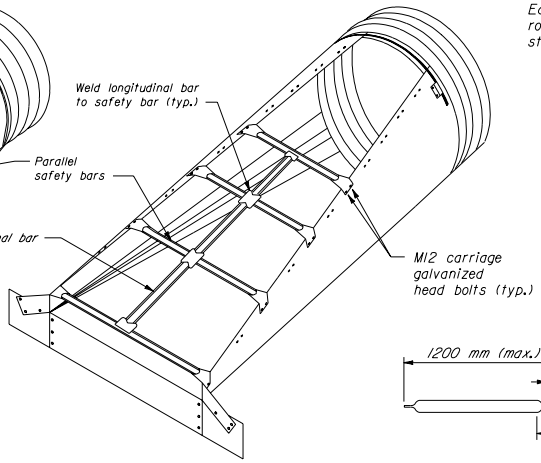

CROSS DRAINAGE END SECTION

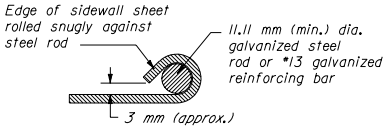

SECTION A-A

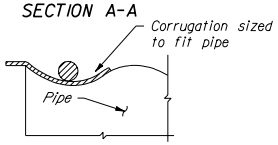

SECTION B-B

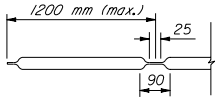

LONGITUDINAL DRAINAGE BAR

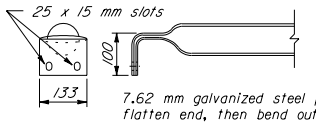

7.62 mm galvanized steel pipe: flatten end, then bend outside 100 mm to match end section sides.

PARALLEL BARS

SAFETY BAR DETAILS

NOTE:

1. Dimensions not labeled are in millimeters.
2. Use end sections on 1:4 to 1:6 slopes only. Use toe plate extension where shown on the plans.
3. Fabricate safety and longitudinal bars from steel pipe conforming to ASTM A53 schedule 40 specifications. Galvanize bars hot dipped after fabrication.
4. A longitudinal bar is required for cross drainage end sections when the span is greater than 750 mm. Use additional longitudinal bars if spacing exceeds 750 mm on larger end sections.
5. Safety and longitudinal bars are not required on 750 mm and smaller cross drainage end sections.
6. Safety bars are not required on 450 mm and smaller parallel drainage end sections.
7. 450 mm diameter sleeves have a thickness of 2.01 mm, all others are 2.77 mm.
8. Provide hardware in the metric sizes shown. Equivalent imperial sizes may be used when metric sizes are not available.

METAL END SECTIONS FOR ROUND PIPE CULVERT

DIMENSIONS IN MILLIMETERS

PIPE DIA.	(MIN.) THICK	A	H	W	OVERALL WIDTH	SLOPE	L	SLOPE	L
450	1.63	200	150	600	1000	1:4	800	1:6	1200
600	1.63	200	150	750	1150	1:4	1400	1:6	2100
750	2.77	300	225	900	1500	1:4	2000	1:6	3000
900	2.77	300	225	1050	1650	1:4	2600	1:6	3900
1050	2.77	400	300	1200	2000	1:4	3200	1:6	4800
1200	2.77	400	300	1350	2150	1:4	3800	1:6	5700
1350	2.77	400	300	1500	2300	1:4	4400	1:6	6600
1500	2.77	400	300	1650	2450	1:4	5000	1:6	7500

METAL END SECTIONS FOR PIPE ARCH CULVERT

DIMENSIONS IN MILLIMETERS

EQUIV. DIA.	SPAN	RISE	(MIN.) THICK	A	H	W	OVERALL WIDTH	SLOPE	L	SLOPE	L
450	525	375	1.63	200	150	675	1075	1:4	500	1:6	750
600	700	500	1.63	200	150	850	1250	1:4	1000	1:6	1500
750	875	600	2.77	300	225	1025	1625	1:4	1400	1:6	2100
900	1050	725	2.77	300	225	1200	1800	1:4	1900	1:6	2850
1050	1225	825	2.77	400	300	1375	2175	1:4	2300	1:6	3450
1200	1425	950	2.77	400	300	1575	2375	1:4	2800	1:6	4200
1350	1600	1075	2.77	400	300	1750	2550	1:4	3300	1:6	4950
1500	1775	1175	2.77	400	300	1925	2725	1:4	3700	1:6	5550
1800	2075	1425	2.77	400	300	2225	3025	1:4	4700	1:6	7050

NO SCALE

U.S. DEPARTMENT OF TRANSPORTATION
FEDERAL HIGHWAY ADMINISTRATION
FEDERAL LANDS HIGHWAY

METRIC STANDARD

METAL END SECTIONS WITH SAFETY BARS

STANDARD APPROVED FOR USE 3/1996
REVISED: 8/1997

STANDARD
M602-9

17 NOV 2000

f:\standrdw\metric\mst60209.dgn